ASHOK LEYLAND
ENGINEERING YOUR TOMORROWS
U-TRUCK
U-2523 T
6X4 TIPPER
ASHOK LEYLAND
U-2523 T
HIGHER VEHICLE UPTIME
FASTER TURNAROUND TIME
3-YEAR CARE PACKAGE

THE RUGGED U-2523 T IS DESIGNED TO MEET THE DEMANDS OF HIGH PRODUCTIVITY IN MINES, NAMELY FASTER TRIP TIMES AND HIGHER UPTIME, IRRESPECTIVE OF THE DEPTH OR TERRAIN. POWERED BY A HIGH-TORQUE YET FUEL-EFFICIENT 'H' SERIES COMMON RAIL FUEL INJECTION SYSTEM (CRS) ENGINE COUPLED WITH A 9-SPEED GEARBOX, AND SUPPORTED BY A HEAVY-DUTY BOGIE SUSPENSION, THE U-2523 T OFFERS THE BEST RETURNS ON INVESTMENT.

AGGREGATES

CRS ENGINE

- Turbocharged intercooled 'H' series CRS BSIII diesel engine delivering 225 HP @ 2500 rpm
- Higher torque of 800 Nm @ 1400 – 1900 rpm for better pickup
- CRS ensures higher fuel efficiency
- Efficient engine-management system for optimal fuel delivery at varying operating conditions

CLUTCH

- 380 mm dia axial spring clutch with organic lining for longer life
- Clutch booster for fatigueless driving

GEARBOX

- Heavy-duty 9-speed synchromesh gearbox for faster turnaround time
- Deeper first gear ratio of 8.83:1
- Crawler gear with ratio of 12.73:1 to negotiate steep gradients

REAR AXLE

- Fully-floating single-speed MT-149.5 hypoid axle for longer life
- Optimised rear axle ratio of 6.17:1 to carry heavier payloads

FRONT AXLE

- All-new, heavy-duty front axle
- Higher wheel-lock angle for shorter turning-circle dia

FRAME

- 11" deep joggled, 8 mm thick frame with single-piece 6 mm internal flitch to carry heavier payloads
- Flanged fasteners for lesser maintenance

BRAKE

- 410 mm dia brake system in rear for better braking efficiency
- RAF 7 brake lining for longer brake-lining life

FUEL TANK

- 200 L cross-linked polymer tank
- No formation of rust; higher impact strength
- Reed-type sensor for higher accuracy in measurement of fuel level

SUSPENSION

- Front: Semi-elliptic, multi-leaf, uprated springs with shock absorbers for better driving comfort
- Rear: Heavy-duty bogie suspension for higher load-carrying capacity in highly articulated conditions

CABIN

- Factory-built day cab
- Fully-suspended cab for better riding comfort
- Spacious cab with larger stowage space
- Retractable seat belt for driver safety
- 3-piece metallic bumper with twin headlamps
- Optional air-conditioning

LOAD BODY

- Ashok Leyland hydraulics with in-house service support
- Increased sheet thickness
- Sturdy under-body construction with increased number of cross bearers
- Increased cylinder dia
- High-strength BSK 46 material for body and sub-frame
- Front-end tipping

OTHER SALIENT FEATURES

- Long-life air filters
- 6" and 8" brake system in front and rear respectively
- Water-proof connectors for all electrical connections
- Push-to-fit connectors to prevent air-pressure drop
- Lamp in the engine compartment
- Sleeping provision in day cab for driver comfort
- Exhaust brake

OPTIONAL

- Nylon or mine lug tyres
- Music system (FM / AM / CD player)
- DGMS features
- A/c or non a/c cabin
- ALERT (Telematics)

SUPERIOR OWNERSHIP EXPERIENCE

2 years / 5000 hours standard warranty

3 YEAR CARE TIPPERS PACKAGE

	GOLD	SILVER	BRONZE
Comprehensive maintenance covering all charges for labour, consumables, wear & tear components and lubes	✓		
Scheduled maintenance covering all charges for labour	✓	✓	
Cashless accident repair with assured restoration time	✓	✓	✓
Personal accident cover for the driver	✓	✓	✓

Silver care package with scheduled maintenance covering all charges for consumables and lubes also available.

TIPPER BODY OPTIONS AND APPLICATIONS

Body	Sheet Thickness (Floor x Side Board x Head Board) mm	Applications
16 cu. m box	6 x 5 x 5	Ores and mineral transport (Bauxite, limestone)
14 cu. m scow (Rock body)	8,4 x 5 x 5	Marble, stone quarry For overburden removal Irrigation and canal projects
14 cu. m scow (Hardox body)	6,4 x 5 x 5	Boulders and other applications with impact loading

TECHNICAL SPECIFICATIONS

Engine	'H' series CRS BSIII
Maximum power	225 HP @ 2500 rpm
Maximum torque	800 Nm @ 1400 - 1900 rpm
Clutch	15" dia RDC with organic facing material
Transmission	9-speed with 8.83:1 FGR and 12.73:1 crawler gear ratio
Front axle	Forged I section reverse Elliot
Rear axle	Fully-floating single-speed hypoid with 6.17:1 RAR
Frame	279 x 90 x 8 joggled bolted frame with 6 cross members
Suspension	Front: Semi-elliptic, multi-leaf Rear: Bogie
Brakes	Full-air, dual-line brakes
Parking brakes	Flick-valve operated pneumatic on rear wheels only
Fuel tank capacity	200 L cross-linked polymer tank
Battery	(12 V 130 AH) x 2
Tyres	11 x 20 - 16 PR (Optional: 11 x 20 - 18 PR with mine lug pattern)

MAJOR DIMENSIONS (IN MM)

Wheel base	3900
Overall length	7680
Overall width	2500
Front overhang	1520
Rear overhang (frame)	1450
Front track	2044
Rear track	1870
Min. ground clearance	260
Min. turning-circle dia	15200

PERFORMANCE

Maximum speed in top gear	80 kmph
Maximum gradeability (with crawler gear)	46.3%

WEIGHT (KGS)

	Unladen (16 cu. m box)	Laden
Front axle	3900	6000
Rear axle	6500	19000
Total	10400	25000

Specifications are subject to change due to continuous improvements and are for reference only.
Do not drill or weld on the frame.

COACH BUILDER DRAWING

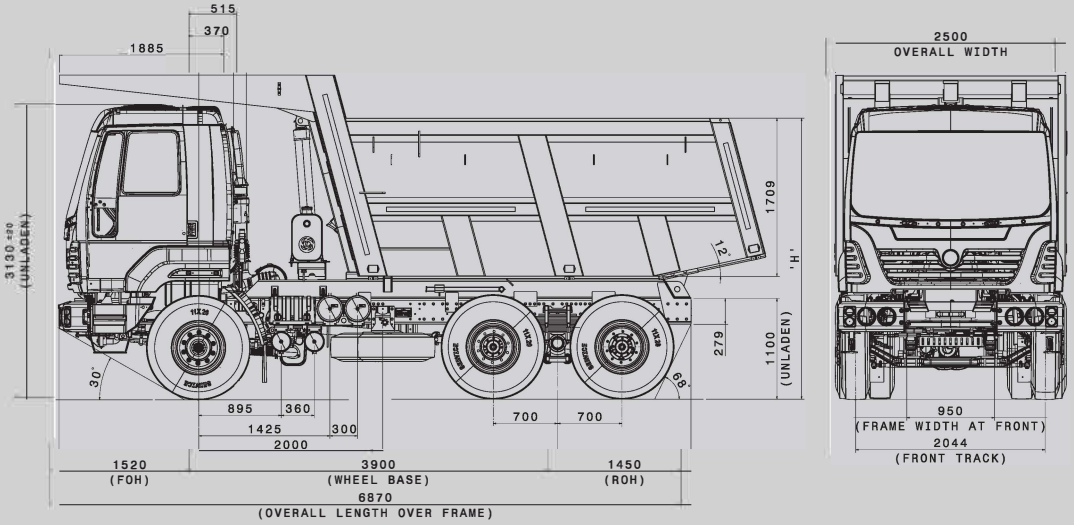

KIFARU MOTORS ZW
Tel: +263 774 971 990
Email: admin@kifarumotors.co.zw